Q. Elaborate on various types of biohazards. What are the consequences of biohazards if not handled properly? – 10 M

Answer:

Types of Biohazards

1. Infectious agents
    - Microorganisms that can cause disease in humans, animals, or plants.
    - Can lead to diseases ranging from mild (common cold) to severe (HIV/AIDS, tuberculosis, COVID-19) and may lead to loss of life.
    - Examples:
        - Bacteria: Streptococcus, Escherichia coli, Mycobacterium tuberculosis
        - Viruses: HIV, SARS-CoV-2, Rhinovirus
        - Fungi: Aspergillus, Candida albicans
        - Parasites: Plasmodium, Toxoplasma gondii
2. Biological toxins
    - Toxic substances produced by microorganisms, plants, or animals that can harm living organisms.
    - Exposure can result in poisoning, neurological damage, or death.
    - Toxins can contaminate food or water supplies, leading to widespread health issues.
    - Examples: Botulinum toxin, Ricin, Tetrodotoxin
3. Allergens
    - Substances that cause allergic reactions in some individuals.
    - Reactions range from mild (sneezing, itching) to severe (anaphylaxis).
    - Chronic exposure can lead to respiratory issues or other long-term health effects.
    - Examples: Pollen, mold spores, pet dander
4. Genetically Modified Organisms (GMOs)
    - Organisms whose genetic material has been altered using genetic engineering techniques.
    - Potential risks include allergic reactions, resistance to antibiotics, and impacts on biodiversity and ecosystems.
    - Examples: Bt corn, AquaBounty salmon
5. Waste products and medical waste
    - Biological waste from farming, industrial processes, or healthcare settings.
    - Examples: Manure, animal remains, used syringes, surgical instruments, contaminated bandages and dressings.
    - Can harbor pathogens and spread infections if improperly handled.
6. Vectors
    - Animals that transmit diseases to humans.
    - Examples: Mosquitoes (malaria, dengue), ticks (Lyme disease), rats (leptospirosis, hantavirus).
    - Vector-borne diseases can lead to epidemics and major public health problems.
7. Human and animal bodily fluids

    - Blood, urine, saliva, semen and other fluids that may carry infectious pathogens.
    - Can transmit diseases such as HIV, hepatitis, and other infections.
8. Recombinant DNA and laboratory-engineered organisms
    - DNA molecules artificially combined from different organisms.
    - Examples include gene therapy viruses and engineered bacteria or viruses used in research.

Consequences of biohazards if not handled properly

- Health issues such as infections, poisoning, and diseases.
- Food poisoning and contamination.
- Environmental damage due to contamination of soil, water, or ecosystems.
- Loss of productivity in livestock and crops.
- Animal infestations and spread of pathogens.
- Allergic reactions, respiratory problems, neurological damage, or death in severe cases.
- Public health impacts including outbreaks or epidemics.

Q. List out and discuss about different biosafety levels with a neat triangular diagram – 10 M

Answer:

Biosafety Levels (BSL)

- Biosafety levels are defined safety protocols designed to protect laboratory personnel, the environment, and the product when handling biological agents.
- Each biosafety level (BSL-1 to BSL-4) is defined based on factors such as risks related to containment, severity of infection, transmissibility, nature of work conducted in the lab, origin of the microbe, agent in question, and route of exposure.

Different Biosafety Levels

1. Biosafety Level 1 (BSL-1)
    - Lowest level of biosafety.
    - Designed for labs working with agents that pose minimal threat to humans or the environment.
    - Agents are unlikely to cause disease in healthy individuals.
    - Standard microbiological practices such as hand washing and use of gloves are followed.
    - Example organism: Non-pathogenic Escherichia coli.
2. Biosafety Level 2 (BSL-2)
    - Used for handling moderate-risk agents that can cause human disease but are usually not lethal.
    - Treatments or vaccines are generally available.
    - Access to the laboratory is restricted and work is conducted in biological safety cabinets.

    - Infection may occur through ingestion, inhalation, or contact with mucous membranes.
    - Examples: Staphylococcus aureus, Salmonella, HIV.
3. Biosafety Level 3 (BSL-3)
    - Used for agents that can cause serious or potentially lethal diseases, especially through inhalation.
    - Treatments may be available.
    - All work is done in biological safety cabinets or containment devices.
    - Laboratory has controlled access and personnel are monitored and possibly vaccinated.
    - Examples: Mycobacterium tuberculosis, SARS-CoV-2, Yersinia pestis.
4. Biosafety Level 4 (BSL-4)
    - Highest level of biosafety.
    - Used for dangerous and exotic agents that pose a high risk of aerosol-transmitted infections and often have no known treatment or vaccine.
    - Full isolation and highest level of containment are required.
    - Personnel wear full-body, air-supplied suits and all materials must be decontaminated before leaving the facility.
    - Laboratories are isolated with dedicated exhaust air and decontamination systems.
    - Examples: Ebola virus, Marburg virus, Lassa fever virus.

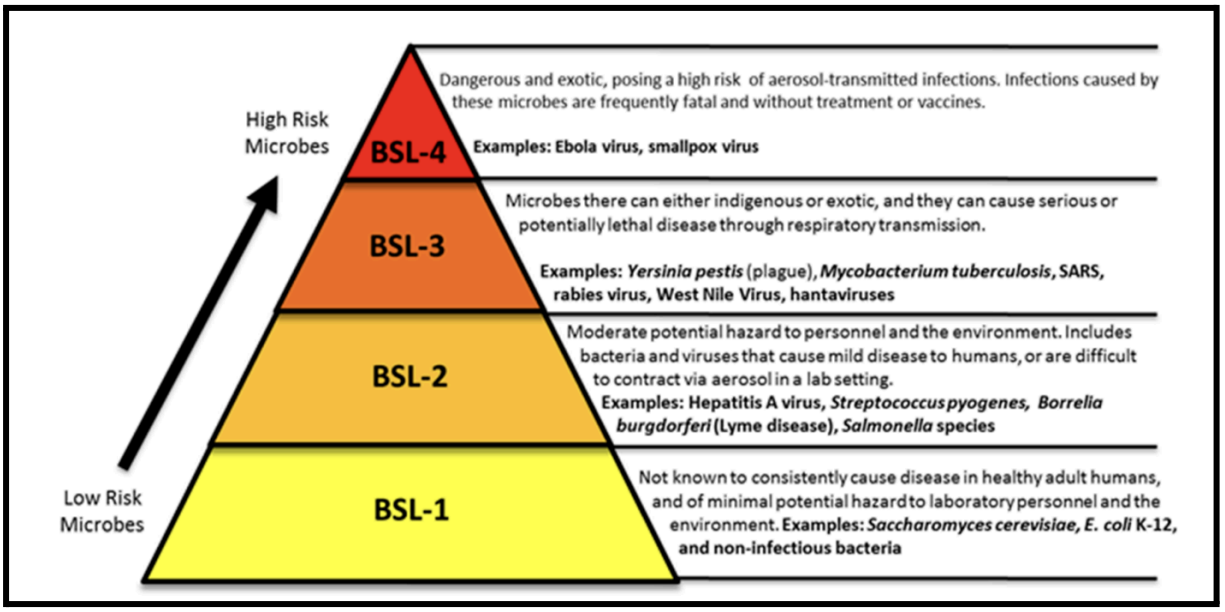

Q. With the help of a neat diagram explain features and advantages of BSC-III – 5 M

Answer:

Class III Biosafety Cabinet (BSC-III)

- Class III cabinets are leak-tight, totally enclosed but ventilated cabinets.
- All air entering or leaving the cabinet passes through HEPA filters.
- Designed for work with highly dangerous pathogens and high-risk biological materials.

Features of BSC-III

- Cabinet is completely enclosed and leak-tight.
- Rubber gloves are attached to the cabinet, allowing operation without direct contact.
- Also called glove boxes.
- Transfer chamber is provided to sterilize materials before removal.
- Exhaust air is treated with double HEPA filters or HEPA filters with incineration.
- Prevents direct contact between operator and samples.
- Often custom-built with equipment installed inside the chamber.
- Suitable for manipulation of high-risk pathogenic organisms and BSL-4 work.

Advantages of BSC-III

- Provides maximum protection to operator, environment, and sample.
- Prevents release of high-risk pathogens into the surroundings.
- Eliminates direct exposure of personnel to infectious materials.
- Ensures sterilization of air before discharge, maintaining a safe environment.
- Suitable for handling extremely hazardous biological agents.

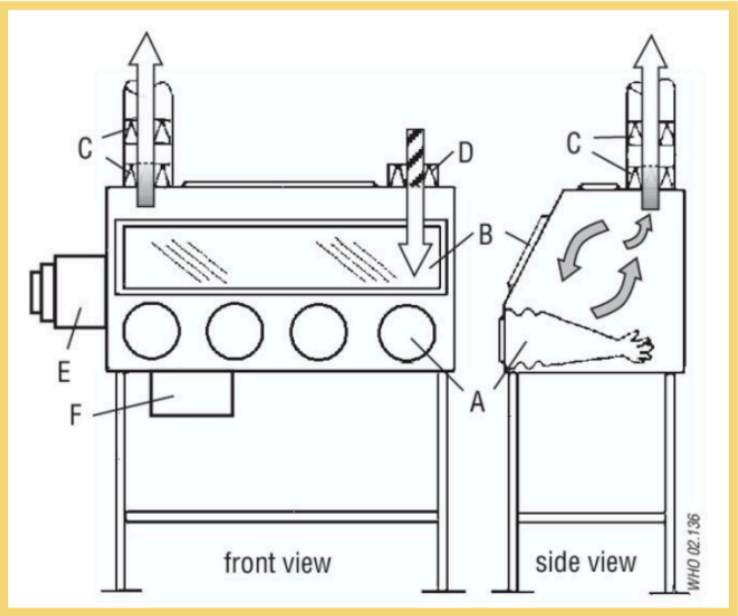

Q. Elaborate on various biohazards from nature – 10 M

Answer:

<u>Biohazards from nature</u>

Biohazards from nature are biological substances or organisms occurring naturally that pose a threat to the health of humans, animals, or plants.

<u>Types of natural biohazards</u>

1. Infectious agents
    - Naturally occurring microorganisms that cause disease.
    - Can infect humans, animals, or plants and may lead to mild or severe illness and loss of life.
    - Types include:
        - Bacteria: Streptococcus, Escherichia coli, Mycobacterium tuberculosis
        - Viruses: HIV, SARS-CoV-2, Rhinovirus
        - Fungi: Aspergillus, Candida albicans
        - Parasites: Plasmodium, Toxoplasma gondii
2. Biological toxins
    - Toxic substances produced naturally by microorganisms, plants, or animals.
    - Exposure may cause poisoning, neurological damage, paralysis, or death.
    - Toxins may contaminate food or water supplies and create widespread health problems.
    - Examples: Botulinum toxin, Ricin, Tetrodotoxin
3. Allergens
    - Naturally occurring substances that trigger allergic reactions in sensitive individuals.
    - Reactions may range from mild irritation to severe anaphylaxis.
    - Chronic exposure may lead to respiratory problems and long-term health effects.
    - Examples: Pollen, mold spores, pet dander
4. Vectors
    - Animals that naturally transmit diseases from one host to another.
    - Responsible for spreading many infectious diseases in humans.
    - Examples:
        - Mosquitoes transmitting malaria and dengue
        - Ticks transmitting Lyme disease
        - Rats spreading leptospirosis and hantavirus
    - Vector-borne diseases may cause epidemics and major public health impacts.
5. Human and animal bodily fluids
    - Naturally occurring body fluids capable of carrying infectious pathogens.
    - Examples include blood, saliva, semen, and other fluids.
    - Can transmit infections such as HIV, hepatitis, and other communicable diseases.
6. Natural biological waste
    - Waste from animals or biological processes that may contain pathogens.
    - Examples: Animal remains, manure carrying harmful microorganisms.
    - Improper handling may lead to spread of disease and environmental contamination.

<u>Consequences of natural biohazards</u>

- Spread of infectious diseases in humans and animals.
- Food and water contamination.
- Allergic reactions and respiratory disorders.
- Poisoning, neurological damage, paralysis, or death.
- Epidemics and public health emergencies.

- Environmental contamination and ecological imbalance.
- Economic loss due to illness, livestock loss, or reduced productivity.

Q. Explain with the help of a neat diagram, biosafety cabinet Type B2 – 10 M

Answer:

Explanation / Working

- Air is drawn in from the front opening, creating an air barrier that protects the operator.
- Air is also drawn from the top of the cabinet to supply downflow air inside the cabinet.
- The air passes through HEPA filters before being exhausted.
- All contaminated air is exhausted through a dedicated duct system with an exhaust fan.
- Air leaving the facility is sterilized before release into the atmosphere.

Features of Type B2 Cabinet

- 100% of the air is externally exhausted.
- No air is recirculated within the cabinet.
- Both inflow air and downflow air are completely exhausted.
- Dedicated duct system is required.
- Removal of toxic vapors generated inside the cabinet.
- Suitable for work involving hazardous chemicals along with microbiological work.
- Expensive and generally used in specialized laboratories such as toxicology laboratories.

Advantages of Type B2 Cabinet

- Complete removal of contaminated air.
- Effective control of toxic vapors and hazardous chemicals.
- High level of protection to operator, environment, and sample.
- Prevents recirculation of contaminated air, reducing risk of exposure.
- Suitable for tasks requiring maximum containment and chemical safety.

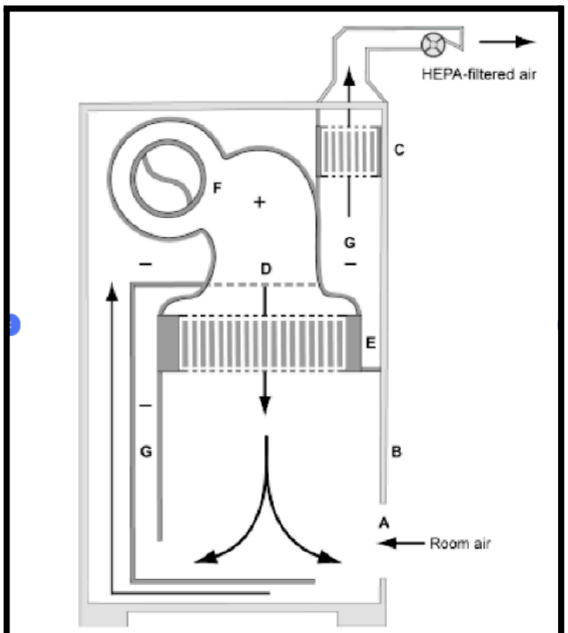

The Class II, Type B2 BSC (A) front opening; (B) sash; (C) exhaust HEPA filter; (D) supply HEPA filter; (E) negative pressure exhaust plenum. Note: The carbon filter in the exhaust system is not shown. The cabinet needs to be hard connected to the building exhaust system.

Q. Differentiate the biosafety cabinets I, II and III – 10 M

Answer:

Parameter	Class I	Class II	Class III
Protection	Personnel and environment only	Personnel, environment, and product	Maximum protection to personnel, environment, and product
Design	Open front, room air enters	Open front, sterile air curtain and HEPA downflow	Fully enclosed, leak-tight, glove box
Filtration	Exhaust air HEPA-filtered	Inflow and exhaust HEPA-filtered	All air double HEPA-filtered or equivalent
Airflow / stats	Air drawn inward and exhausted	Part recirculated and part exhausted (e.g., A2: ~60–70% recirculated, 30–40% exhausted; B2: 100% exhausted)	100% controlled exhaust, no direct exposure
Operator contact	Direct handling through opening	Handling through opening with air barrier	Handling using attached gloves
Special features	May be ducted or unducted	Sterile air curtain protects work surface	Transfer chamber for sterilizing materials

Typical use	Low to moderate-risk work, aerosol-generating procedures	Moderate to high-risk pathogens, cell culture	Highly dangerous pathogens
BSL suitability	BSL-1, BSL-2	BSL-2, BSL-3	Mainly BSL-3, BSL-4

Q. Comment on various types of biohazards' impact on human health – 5 M

Answer:

Impact of various types of biohazards on human health

1. Infectious agents
    - Cause diseases in humans ranging from mild infections to severe illnesses.
    - May lead to conditions such as tuberculosis, AIDS, COVID-19 and other infections.
    - Severe cases may result in loss of life.
2. Biological toxins
    - Exposure can cause poisoning, neurological damage, paralysis, or death.
    - Toxins may contaminate food or water and affect large populations.
3. Allergens
    - Cause allergic reactions such as sneezing, itching, and respiratory problems.
    - Severe reactions like anaphylaxis can be life-threatening.
    - Long-term exposure may lead to chronic respiratory disorders.
4. Vectors
    - Transmit diseases from animals to humans.
    - Can spread diseases such as malaria, dengue, and Lyme disease.
    - Vector-borne diseases may lead to epidemics and major public health problems.
5. Human and animal bodily fluids
    - Can carry infectious pathogens and spread diseases such as HIV, hepatitis, and other infections.
6. Biological waste
    - Can harbor pathogens and cause infections if improperly handled.
    - Improper disposal may contaminate water, soil, and food sources, affecting human health.

Q. List and explain any four biosafety principles followed at all biosafety levels – 8 M

Answer:

<u>Biosafety principles followed at biosafety levels</u>

1. Risk assessment and containment

    - Each biosafety level is defined based on risks related to containment, severity of infection, transmissibility, nature of work, origin of the microbe, agent in question, and route of exposure.
    - Proper containment methods are selected according to the level of risk of the biological agent.
2. Protection of personnel, environment, and product
    - Biosafety practices are designed to protect laboratory personnel, the surrounding environment, and biological materials.
    - Use of containment equipment such as biological safety cabinets helps prevent exposure and aerosol spread.
3. Use of protective equipment and safe laboratory practices
    - Personnel use protective clothing and follow standard microbiological practices such as use of gloves, lab coats, and other protective equipment depending on the biosafety level.
    - Access to laboratories may be restricted and work is carried out using appropriate containment devices.
4. Decontamination and sterilization of materials
    - Materials must be decontaminated before leaving the laboratory.
    - Air and contaminated materials are sterilized using HEPA filtration, autoclaving, or other decontamination systems to prevent spread of pathogens.

These principles ensure safe handling of biological agents and reduce risks to humans and the environment.

Q. Explain the construction, classification, working, and applications of Biosafety Cabinets in biotechnology and biomedical research – 8 M

Answer:

Biosafety Cabinets (BSC)

- Biosafety cabinets are enclosed workspaces with a ventilated hood designed to contain pathogenic microorganisms during microbiological processes.
- They provide a clean and safe environment and protect personnel, product, and the surrounding environment.
- Aerosols formed during processing are contained, and air is decontaminated using HEPA filters.

Construction of Biosafety Cabinets

- Enclosed cabinet with a ventilated hood and controlled airflow.
- HEPA filters are provided to decontaminate air moving out of the cabinet.
- Work surface provided inside the chamber for handling biological materials.
- Airflow system with fan to draw air through filters and maintain sterile conditions.
- In Class III cabinets, rubber gloves and a transfer chamber are provided to prevent direct contact and allow sterilization of materials.

Classification of Biosafety Cabinets

1. Class I
    - Provides protection to personnel and environment but not to the product.
    - Room air is drawn over the work surface and exhausted through HEPA filters.
    - Used for low to moderate-risk microorganisms and aerosol-generating procedures.

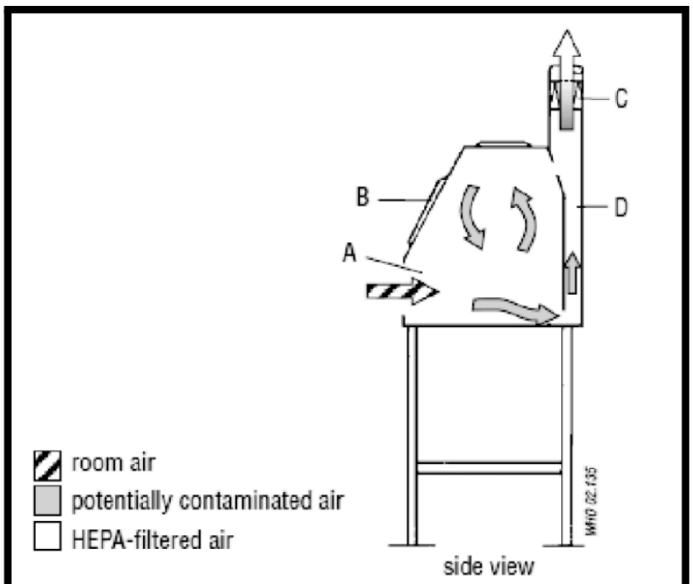

Schematic diagram of a Class I biological safety cabinet. A, front opening; B, sash; C, exhaust HEPA filter; D, exhaust plenum.

2. Class II
    - Provides protection to personnel, environment, and product.
    - Sterile air curtain flows over the workstation and air passes through HEPA filters.
    - Types include A1, A2, B1, B2, and C1 depending on airflow and exhaust pattern.
    - Suitable for moderate to high-risk microorganisms.
3. Class III
    - Leak-tight, totally enclosed cabinets with attached gloves.
    - All air entering and leaving passes through HEPA filters.
    - Used for highly dangerous pathogens and BSL-4 work.

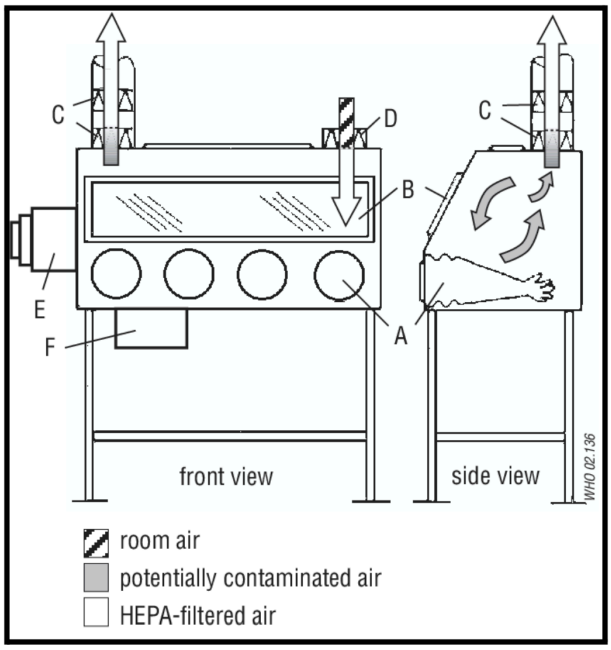

Working of Biosafety Cabinets

- Air is drawn into the cabinet and passes through HEPA filters.
- Filtered air creates controlled airflow over the work surface to prevent contamination.
- Contaminated air and aerosols are captured and sterilized before being exhausted.
- Airflow barrier at the front prevents contaminated air from reaching the operator.
- In enclosed cabinets, operators handle materials through glove ports to avoid direct exposure.

Applications in biotechnology and biomedical research

- Handling infectious microorganisms and pathogens in laboratories.
- Cell culture and tissue culture work.
- Pharmaceutical and vaccine research.
- Handling clinical samples and microbiological cultures.
- Research involving hazardous biological materials and aerosol-generating procedures.

Biosafety cabinets minimize aerosol formation and maintain sterile conditions, ensuring safety in biotechnology and biomedical laboratories.